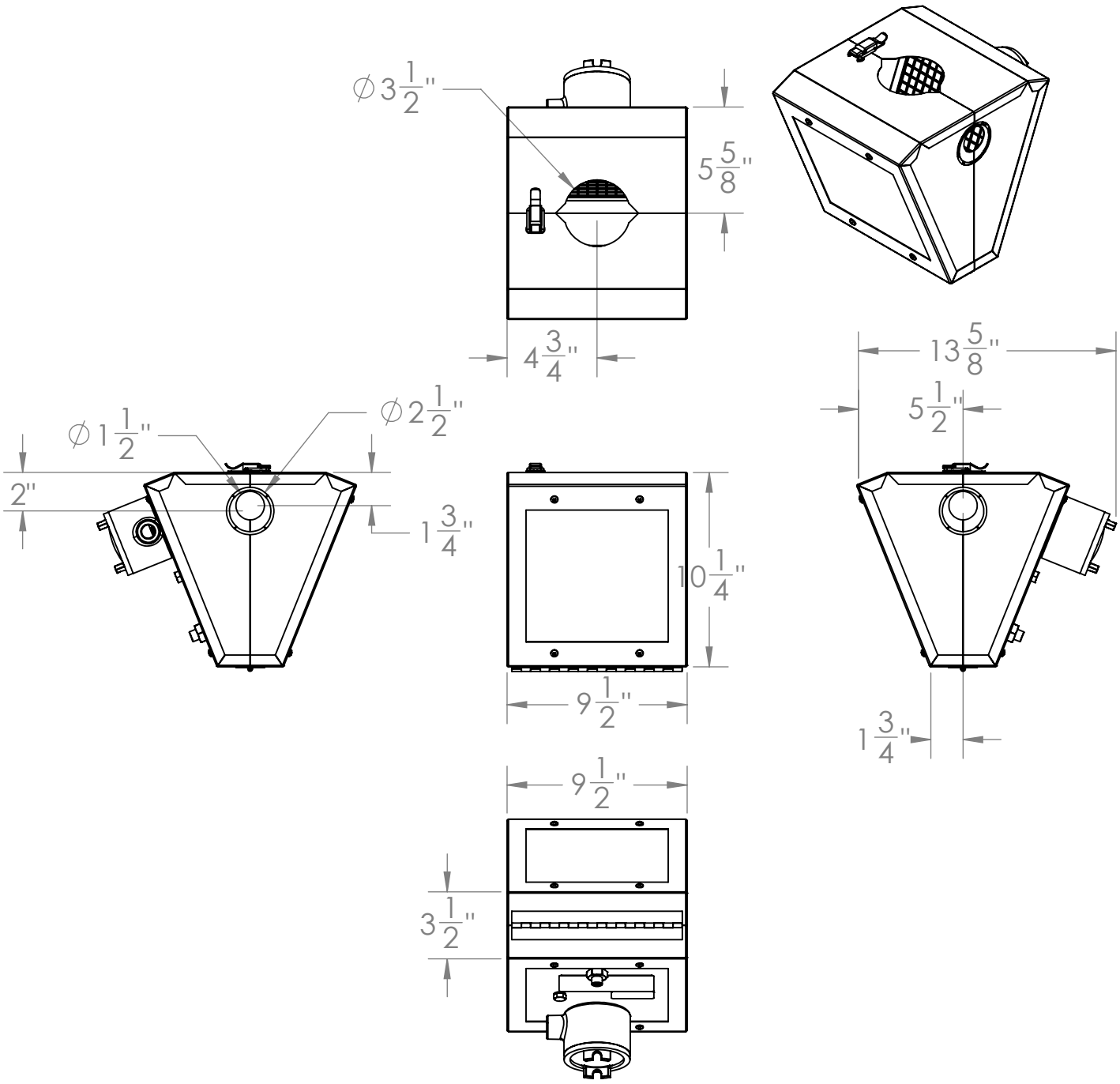
∅3 1/2"
5 5/8"
4 3/4"
13 5/8"
5 1/2"
∅1 1/2"
∅2 1/2"
2"
1 3/4"
10 1/4"
9 1/2"
1 3/4"
9 1/2"
3 1/2"